ROHS

http: //www.okhro.com

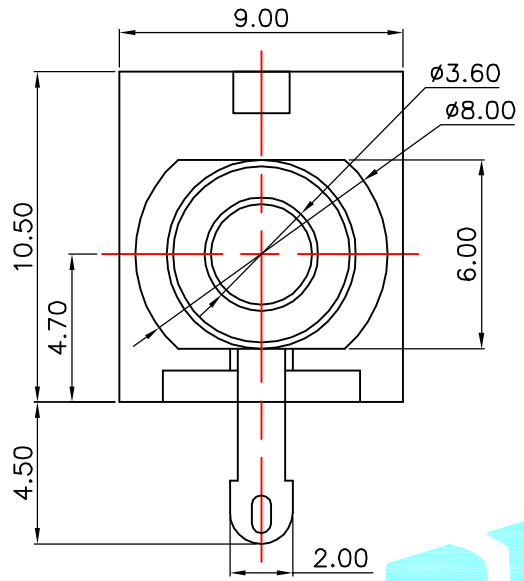

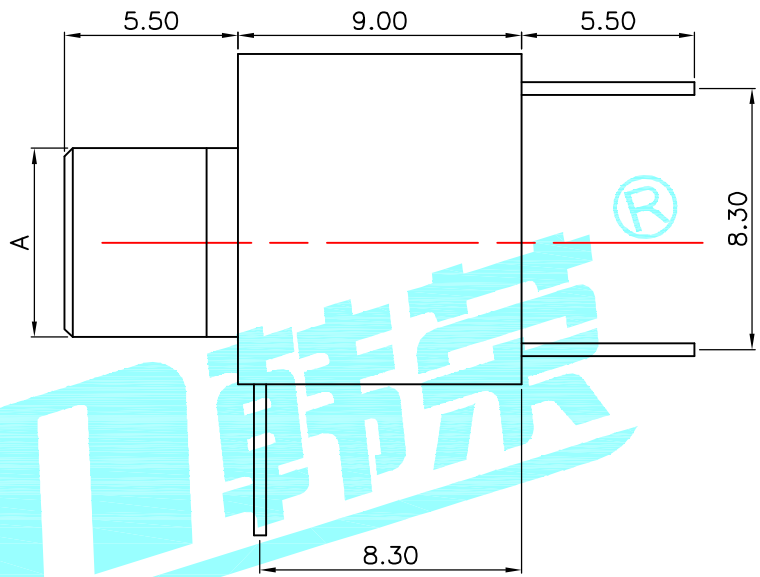

Rating:0.5A 30V DC
Contact Resistance:100 mΩ Max.
Operating temperature:−20℃~70℃
Operating force:3−20N
Operating Life:5,000cycles

Model NO	A=ø6	PJ−3110
	A=M6XP0.5	PJ−3110A
Schematic	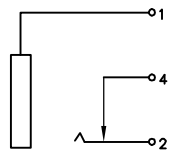	

ITEM	PART NAME	TER'NO.	QTY.	MATERIAL	FINISHING	REMARK
②	Terminal	——	3	Phosphor bronze	Au Plating	——
①	Housing	——	1	Nylon	Black	——

APPROVALS		DATE
DRAWN	J.X.Zhang	2013/11/11
CHECKED		
APPROVALS		

HRO韩荣® ELECTRONICS CO.,LTD

TITLE: PHONE JACKES

PART NO. PJ−3110

TOLERANCES ARE: 30~以上 ±0.30; 10~30 ±0.20; 5~10 ±0.15; ~ 5 ±0.10; ANGLE ±2°

UNIT: mm | SCALE: 1:1 | PROJ: | DRAWING NO. —— | SHEET 1 OF 1

ECN NO.	REV.	DATE.	DESCRIPTION.	CHANGE.	CHECK.	APPRO.
——	A	——	NEW	——	——	——